

M31/M32 MARK IV

Usermanual

GENERAL

M32 MARK IV

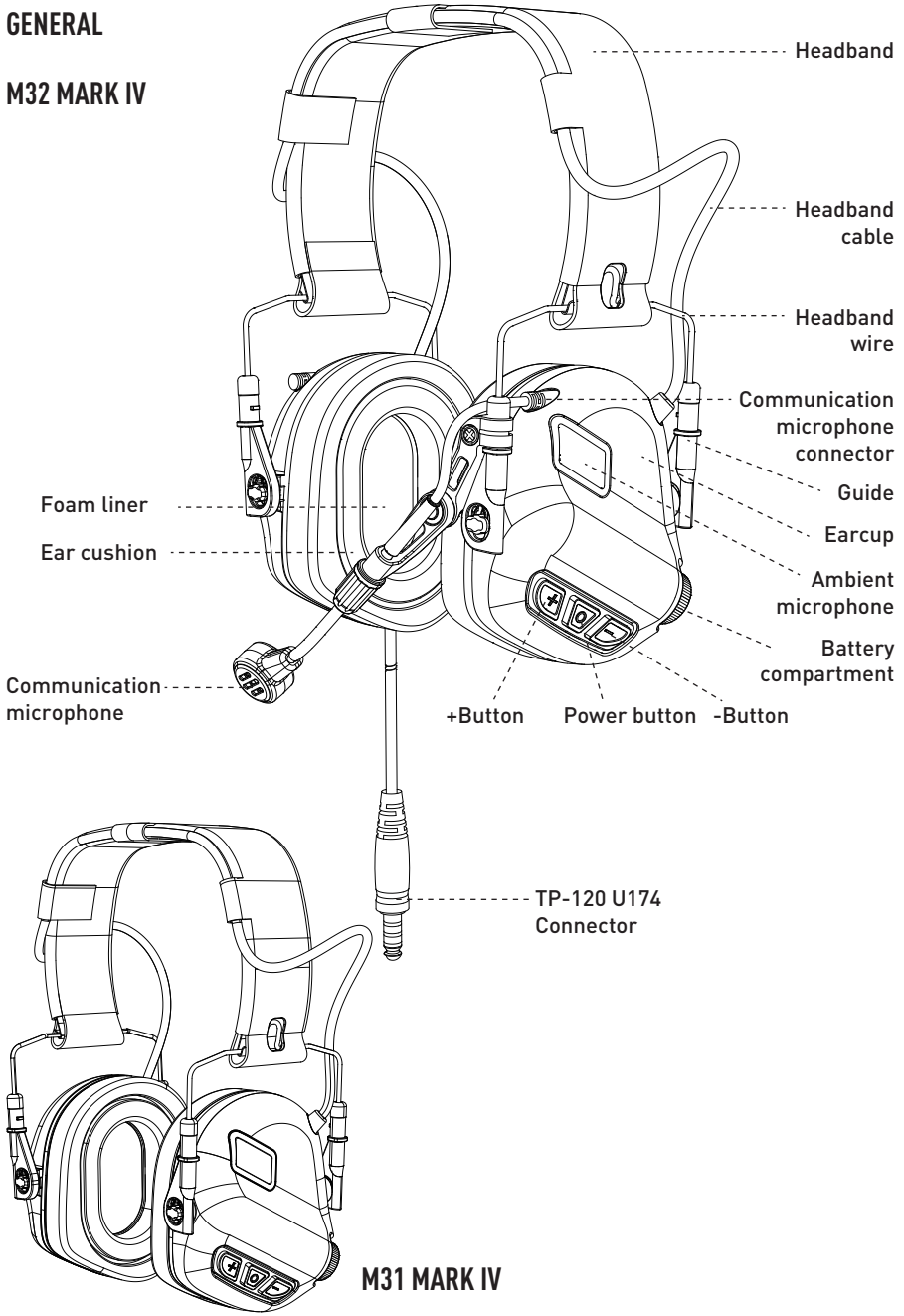

M31 MARK IV

INTRODUCTION

Congratulations and thanks for your choosing EARMOR®
EARMOR® Hearing Protectors designed to protect users from harmful noise.

INTENDED USE

The EARMOR® M31 MARK IV & M32 MARK IV are electronically enhanced noise-canceling headset designed for specialized tasks. It features communication capabilities and is capable of enhancing subtle environmental sounds, tracking human voices with high fidelity optimization, while also blocking dangerous noises exceeding 82 decibels (such as explosions and gunshots). It not only protects hearing, enhances conversation clarity, but also increases situational awareness of the surrounding environment.
The M31 MARK IV is equipped with an AUX interface, allowing connection to smartphones, tablets, computers, and other players using a compatible 3.5mm audio cable, meeting individual entertainment needs.
The M32 MARK IV features detachable microphone with adjustable angles, TP120 Kevlar cable and U-174 military standard connector (NATO)

IMPORTANT USER INFORMATION

Recommendation that the user should ensure that:

1) the earmuffs are fitted, adjusted and maintained in accordance with the manufacturer's instructions;
2) the earmuffs are worn at all times in noisy surroundings;
3) the earmuffs are regularly inspected for serviceability;
Note: if the recommendations given are not adhered to, the protection afforded by the earmuffs will be severely impaired;

Operating and storage temperature

Operating temperature: -20℃ - 60℃
Storage temperature: -40℃ - 70℃
NOTE: Do not store the hearing protector behind a windshield or at temperatures above +70°C
Weight of hearing protector: M31 MARK IV： 340±10g M32 MARK IV： 400±10g

PACKAGING AND DIMENSIONS

1.Shipping Information: The product is suitable for transportation in its original packaging.
2.Size Range: S, M, L.

Adjustability							
Height H(mm)	H115	H115	H130	H130	H130	H140	H140
width W(mm)	W125	W145	W125	W145	W155	W145	W155
Size	S	S/M	S/M	S/M/L	M/L	M/L	L
M indicates earmuffs of "medium'size range. S indicates earmuffs of'small' size range. L indicates earmuffs of "large" size range							

NOTE: These earmuffs complying with EN 352-1 are of 'medium size range', 'small size range' or 'large size range'.'Medium size range' earmuffs will fit the majority of users. 'Small size range' or 'large size range' earmuffs are designed to fit users for whom 'medium size range' earmuffs are not suitable.

WARNING

1) To reduce the risks associated with harmful noise or chemicals: If instructions are not followed, bodily injury may result or protection may be severely affected;
2) When interference increases or the sound level becomes too weak, it is time to charge the batteries;
3) These hearing protectors help reduce exposure to hazardous noise and other loud sounds. Misuse or failure to wear hearing protectors at all times when you are exposed to noise may result in hearing loss or injury;
4) If there is any drainage from your ear or if you have an ear infection, consult with your physician before wearing hearing protection. Failure to do so may result in hearing loss or Injury;
5) The product may be adversely affected by certain chemical substances. Refer to the manufacturer for further information.¨;
6) Earmuffs, and in particular cushions, may deteriorate with use and should be examined at frequent intervals for cracking and leakage.
7) Fitting of hygiene covers to the cushions may affect the acoustic performance of the earmuffs;
8) The earmuff is provided with level-dependent attenuation, safety-related audio input. please check correct operation before use. If distortion or failure is detected, please refer to the manufacturer´s advice for maintenance.
9) Please note that the performance may deteriorate with battery usage and the typical period of continuous use that can be expected from the earmuff batteries. For instructions on how to replace the battery, please ref. BATTERY INSTALLATION.
10) the output of the audio circuit of this hearing protector may exceed the exposure limit level.
11)The product shall not be used if it can't be ensured that the input voltage doesn't exceed the maximum value stated in APPROVALS EN352-8:2020 table 1
For proper use, see user instructions or contact EARMOR Technical Service via Email: cs@earmor.com

TO REDUCE THE SAFETY RISK WHEN USING THE PRODUCT

1) Only use the specified type of battery provided by OPSMEN.
2) If the headset is not to be used for a long time, please remove the batteries to prevent leakage that may damage the headset or cause personal injury.
3) If the microphone or any accessory is damaged or malfunctioning, please cease usage immediately.
4) Contact OPSMEN official after-sales mailbox cs@earmor.com for maintenance service.

FCC WARNING

This device complies with part 15 of the FCC Rules. Operation is subject to the following two conditions: (1) This device may not cause harmful interference, and (2) this device must accept any interference received, including interference that may cause undesired operation.
Note: This equipment has been tested and found to comply with the limits for a Class B digital device, pursuant to part 15 of the FCC Rules. These limits are designed to provide reasonable protection against harmful interference in a residential installation. This equipment generates, uses and can radiate radio frequency energy and, if not installed and used in accordance with the instructions, may cause harmful interference to radio communications. However, there is no guarantee that interference will not occur in a particular installation. If this equipment does cause harmful interference to radio or television reception, which can be determined by turning the equipment off and on, the user is encouraged to try to correct the interference by one or more of the following measures:
—Reorient or relocate the receiving antenna.
—Increase the separation between the equipment and receiver.
—Connect the equipment into an outlet on a circuit different from that to which the receiver is connected.
—Consult the dealer or an experienced radio/TV technician for help.
Note: The Grantee is not responsible for any changes or modifications not expressly approved by the party responsible for compliance. such modifications could void the user's authority to operate the equipment.The device has been evaluated to meet general RF exposure requirement.
To maintain compliance with FCC's RF exposure guidelines, the distance must be at least 20 cm between the radiator and your body, and fully supported by the operating and installation configurations of the transmitter and its antenna(s).

AUDIO INPUT LEVEL

The audio level in the hearing protector is dependent on the audio input level. To prevent harmful noise levels, the hearing protector audio levels is limited to 82dB when connected to a Personal Music Player (PMP). If the hearing protector is connected to a PMP or other device with very high output level ,it is the user's responsibility to set the audio input level to a safe level.

APPROVALS

OPSMEN TECH CO., LTD. declares that the PPE type headset is in compliance with Regulation (EU) 2016/425, Regulation(EC) No 765/2008 and other appropriate directives to fulfill the requirements for the CE marking.
The applicable legislation can be determined by reviewing the Declaration of Conformity (DoC) at https://www.earmor.com/category/certificates/.
These PPE products are followed the conformity assessment procedures as EU type-examination (module B) and conformity to type based on quality assurance of the production process (module D). They are audited annually and type approved by BSI Group The Netherlands B.V., Notified Body No.2797, the address is Say Building, John M. Keynesplein 9, 1066 EP Amsterdam, Netherlands.
EARMOR® M32 have been tested and approved in accordance with
EN 352-1:2020 \ EN 352-4:2020 \ EN 352-6:2020 \ EN 352-8:2020 \ ANSI S3.19-1974

STANDARD ANSI S3.19-1974

EARMOR® M31/M32

Test Frequency (Hz)	125	250	500	1000	2000	3150	4000	6300	8000	NRR
Mean Attenuation (dB)	16.0	18.6	26.0	33.3	36.4	43.2	46.2	47.3	48.3	22
Standard Deviation (dB)	2.5	3.0	2.9	3.3	3.0	3.3	3.3	2.5	3.6	

STANDARD EN 352-1:2020

EARMOR® M31/M32

Test Frequency (Hz)	63	125	250	500	1000	2000	4000	8000	SNR
MEANS	20.5	16.4	21.5	25.4	29.7	30.2	41.6	41.3	29
STD.DEV.	3.6	2.8	2.6	1.9	2.2	2.5	3.0	3.5	
MEAN-SD	16.9	13.6	18.9	23.5	27.5	27.7	38.6	37.9	

H84 (dB) = 31dB Hm = 32.5 Hs = 2.0
M84 (dB) = 27dB Mm = 27.6 Ms = 1.2
L84 (dB) = 21dB Lm = 22.7 Ls = 1.9

SNRm = 30.3
SNRs = 1.2

size : S,M,L

MEANS and SID.DEV.: Mean value and standard deviation at each test frequency
MEAN-SD: APV-value at each test frequency in accordance with EN ISO 4869-2:2018 with the parameter = 1
H-, M- and L-: Values in accordance with EN ISO 4869-2:2018 with the parameter = 1
SNR: SNR-value in accordance with EN ISO 4869-2:2018 with the parameter = 1
Hm, Mm and Lm/Hs, Ms and Ls: The mean values Hm, Mm and Lm calculated in accordance with EN ISO 4869-2:2018 and the corresponding standard deviations Hs, Ms and Ls
SNRm, SNRs: The mean value SNRm calculated in accordance with EN ISO 4869-2:2018 and the corresponding standard deviation SNRs.

STANDARD EN 352-4:2020

EARMOR® M31/M32

L-CRITERION	M-CRITERION	H-CRITERION
94.1 dBA	104.4 dBA	113.0 dBA
Minimum Impulse noise	Minimum Impulse noise	Minimum Impulse noise
85 dBA-PASS	85 dBA-PASS	85 dBA-PASS
Minimum Non Impulse noise	Minimum Non Impulse noise	Minimum Non Impulse noise
94 dBA-PASS	96 dBA-PASS	97 dBA-PASS

STANDARD EN 352-6:2020

EARMOR® M31/M32

Table 1. Test Result

Standard	Criterion level >82 dBA
EN352-6:2020	-16.4 dBV (150.8 mV)

STANDARD EN 352-8:2020

EARMOR® M31/M32

Table 1. Test Result

Standard	Criterion level >82 dBA
EN352-8:2020	-12.8 dBV (229.6 mV)

MARKS DEFINITION



CE 2797	Mandatory conformity marking.CE mark below by Notified Body Number,The variouscomponents of the CE marking must have the same verticaldimension, and may not be smaller than 5 mm.
M31 MARK IV M32 MARK IV	Model Name/Number.
EN 352	EN 352-1, Hearing protectors - General requirements - Part 1:Earmuffs EN 352-4, Hearing protectors - Safety requirements - Part 4:Level-dependent earmuffs EN 352-6, Hearing protectors - Safety requirements - Part 6:Earmuffs with safety-related audio input EN 352-8, Hearing protectors - Safety requirements - Part 8:Entertainment audio earmuffs
EARMOR OPSMEN®	Manufacturer's logo
	This product contains electrical and electronic componentsand must not be disposed of using standard refuse collectionPlease consult local directives for disposal of electrical andelectronic equipment.

BATTERY INSTALLATION

1)Twist counterclockwise to open the battery cover and insert AAA batteries,
2)then twist clockwise to securely close the battery cover.

1

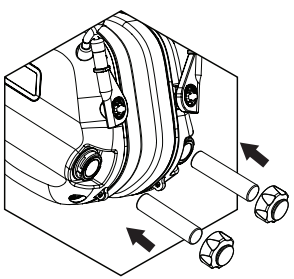

2

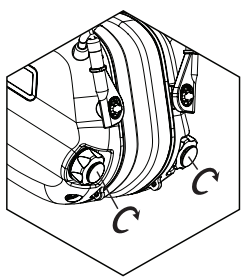

RAIL MOUNT KIT INSTALLATION

M11 ARC Rail Mount Kit

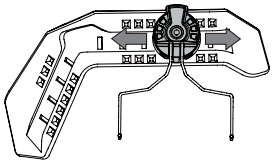

1) Slide the kit into the helmet rail until the base of the kit fully inserted.
2) Ensure kit does not extend past the end of the rail.
3) Ensure the tab engages into the helmet rail locking slot.

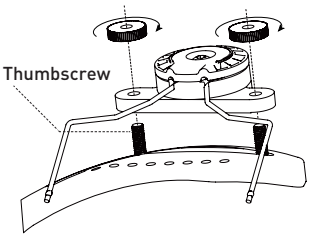

M12 EXFIL® Rail Mount Kit

1) Put 2 thumbscrews attachment into T-Slot, install the base of kit.
2) Adjust position of the kit to a suitable location and tighten the screws.

M13 M-LOK Rail Mount Kit

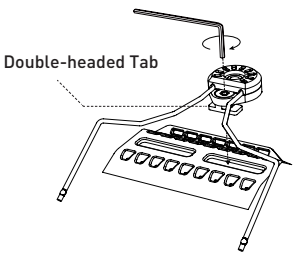

1) Make sure there is enough space between rectangular nut & base of kit.
2) Insert kit into the helmet rail, ensure the Double-headed Tab engage into the rail locking slot.
3) Tighten the screw.

M19 Rail Mount Kit

1) Unfasten the Velcro band of headband.

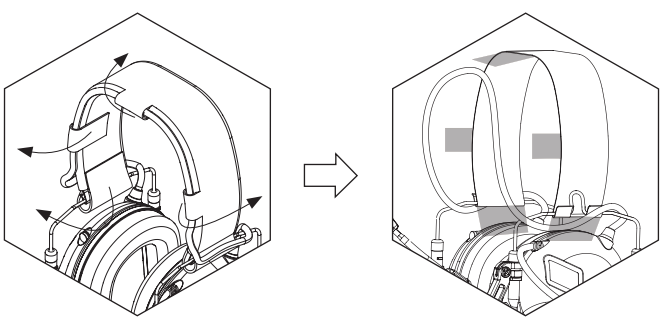

2) Rotate the ear cups perpendicular. Pull out the bracket with some efforts.

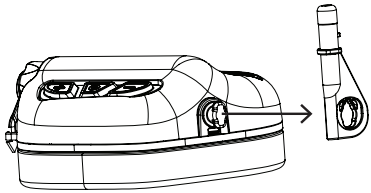

3) Rotate the Microphone perpendicular and pull it out.

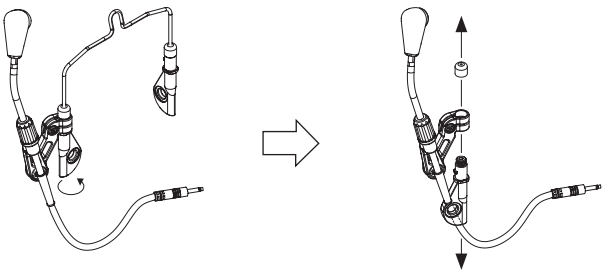

4) Attach the microphone arm by rotating the arm and align it so it fits.

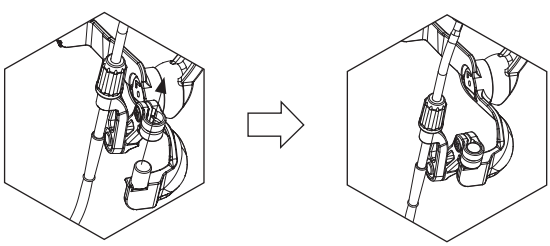

5) Aim the M19 helmet rail mount kit to the hole and press to clip in.

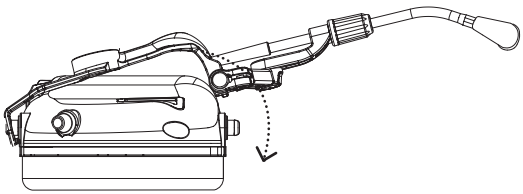

FITTING INSTRUCTION

H Kit Helmet Attachment

1.Put the headset in position over your ears.
2.Adjust the height of the cups by sliding steel wire up or down while holding the headband in place. Ensure the ear fits within the ear cushion.

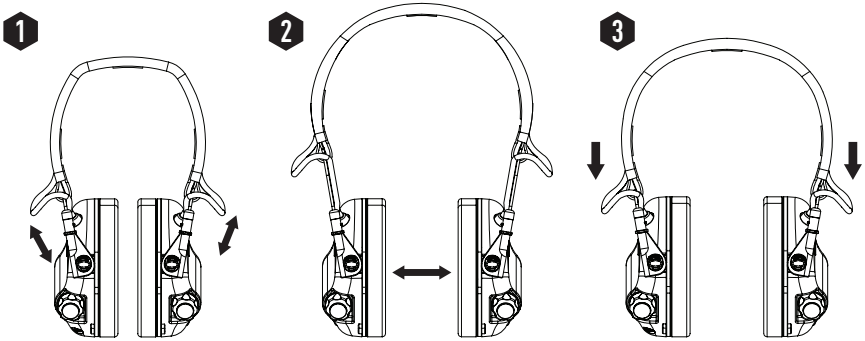

H Kit Helmet Attachment

1)Change the cups to Open Position from Closed Position by pulling the cups outward.
2)Rotate backward and release the cups.
3)Complete.

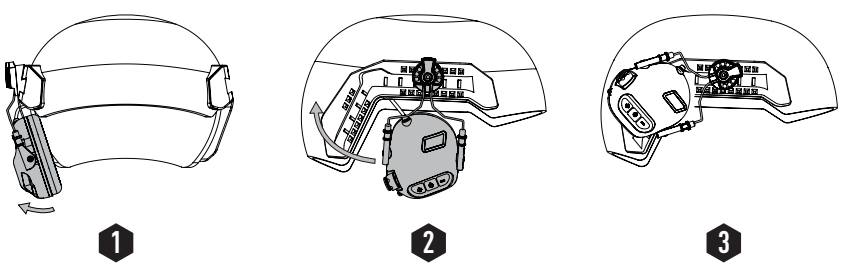

X Kit Helmet Attachment

1) Install the base of the bracket and adjust the base to the proper position with the buckle of the guide rail.
2)Place the end points of wires directly behind the helmet, tighten the connecting wires and press them into the slots to make connecting wires fit the helmet.
3)Open the closed joint and rotate the headset to the position of the ear.
4)Close the headset inward and adjust the length of the stand to a suitable effect and use the universal joint to make the headset fit the head.

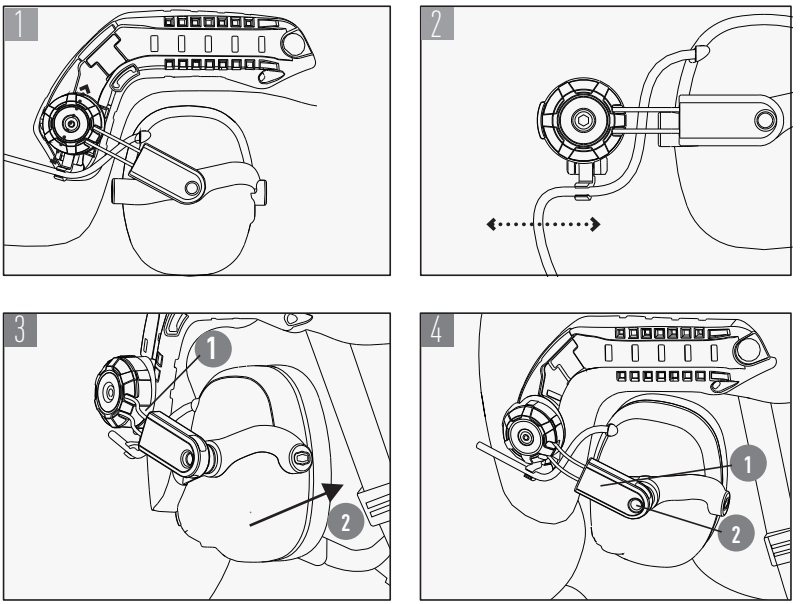

OPERATION INSTRUCTION

TO POWER ON/OFF THE HEADSET

Press and hold the Power button for of 3 seconds.
The headset will indicate power mode with appropriate audio message of "Power On" or Power Off.

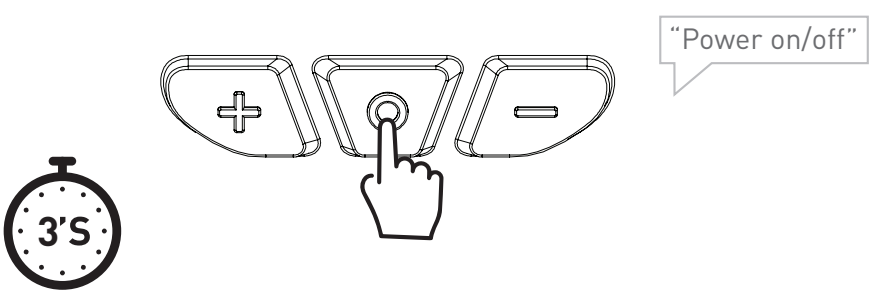

TO ADJUST THE VOLUME

The device has 5 pickup volume levels.
Press the [+] button to turn up volume. "Dudu" prompt means max volume reached.
Press the [-] button to decrease volume. "Ambient Listening off" prompt means device muted.

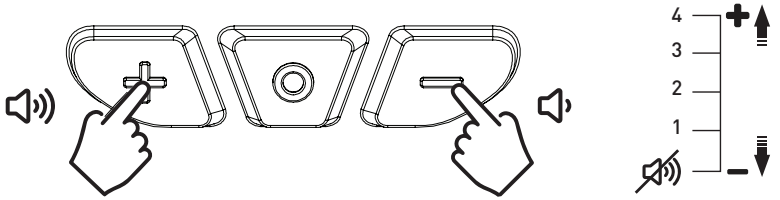

TO CHANGE AMBIENT MODE

The ambient listening function is available in three modes: Ambient listening mode, Conversation, Observation. Each mode adjusts the equalization and volume to optimize listening in different acoustical environments.
When device opened, press Power button for change ambient modes. Modes profiles are shown in the table below:

Ambient Modes	Intended Use
Ambient Listening Mode	Ambient listening mode is the main audio profile for general purpose. Intended to closely approximate open ear listening and sound localization.
Conversation	Conversation mode utilizes AI to intelligently identify speech from conversations and filter out other environmental noises.
Observation	For maximum auditory awareness and sound detection.

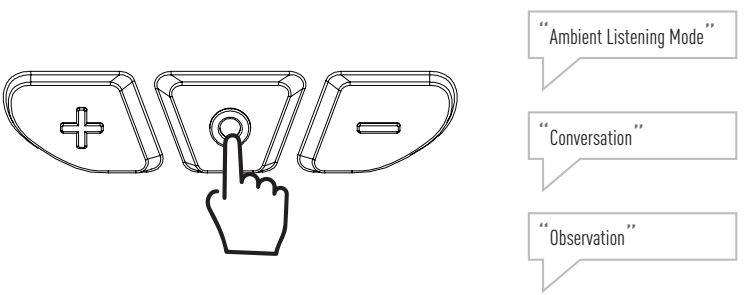

ENTERING THE MENU

1.Press and hold the [+] and [-] buttons at the same time to enter the menu system. A voice will confirm.
2.Short press the [-] button to toggle through the menu. The menu steps are listed below.
3.Use the [+] button to change the setting and, if applicable, toggle through the available set tings. A voice message confirms each step, followed by the current setting. Changes are also confirmed by a voice message.

NOTE: After a few seconds of no activity, the menu returns to volume mode. By pressing [+] and [-], the volume setting can be instantly reached at any stage of the menu.

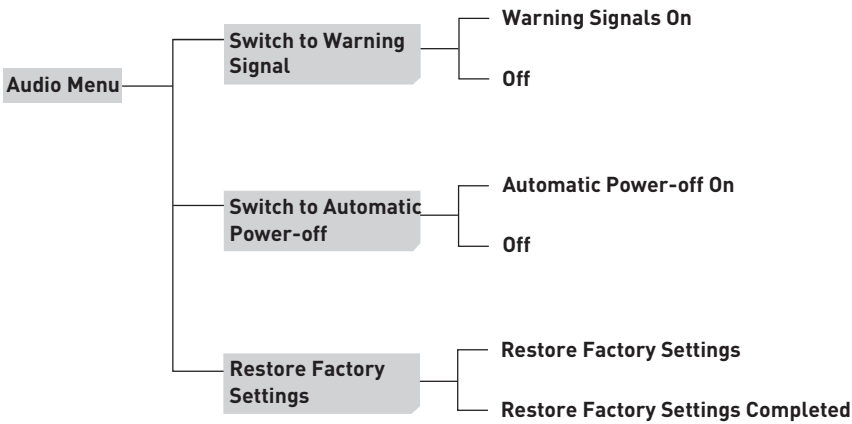

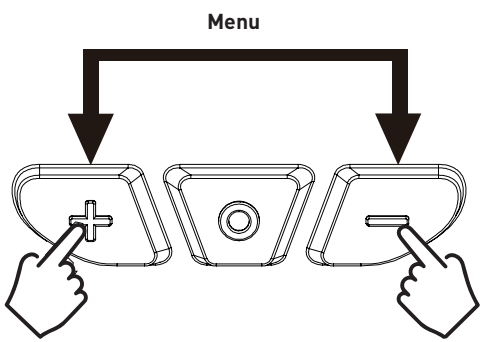

ENTERING EAR-PLUG MODE

1: In maxmum ambiemt volume, click twice [+] to enter earplug mode.the device has 3 earplug mode levels
2: In minimum earplug volume, click [-] twice to directly exit the earplug mode.

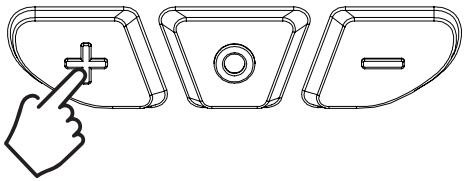

Double Click

CLEANING AND MAINTENANCE

Use a wet cloth with soap and warm water to clean the outer shells, headband and ear cushions.
NOTE: Do NOT immerse the headset in water. Certain chemical substances may damage this product. Contact the manufacturer for more information.The ear cushions and foam liners may deteriorate with use and should be examined at regular intervals for cracking and leakage. Typical life for foam cushion Sealing rings is 12 months. If an ear cushion is damaged, it should be replaced. See Spare Parts Section below.

Spare parts and accessories

Ear Cushions&Foam Liners : S33A or S33B

REPLACING THE EAR CUSHIONS

1)To remove the ear cushion, slide your fingers under the edge of the ear cushion and firmly pull straight out.
2)Insert the foam liner.
3)Then, fit one side of the ear cushion into the groove of the ear cup and then press on the opposite side until ear cushion snaps in place.

SPECIFICATIONS

Product Specifications	Model/Specification	Parameter
Pick-up Characteristics	Activation Noise Reduction Level	82db
	Noise Reduction Value	22dB
	Microphone Sensitivity	-38dB±2dB
	Pick-up Pattern	Omnidirectiona
Speaker and Microphone Components	Speaker	Dynamic Coil
	Speaker Impedance	32 OHM
	Speaker Size	30mm
	Speaker Rated Power	≈ 30mW
	Speaker Frequency Response Range	20Hz-20KHz
	Audio Plug (only for M31)	3.5mm AUX
Operating Time	Duration	60 hours
Temperature	Working Temperature Range	-20~60°C
	Storage Temperature Range	-40~70°C (Use after returning to operational temperature)
Power Source	2 x AAA Batteries	
Materials	ABS+POM+Metal	
Connector (only for M32)	U174/u	
Compatibility (only for M32)	Compatible with various NATO standard communication models	
Net Weigh	M31 MARK IV： 340±10g M32 MARK IV： 400±10g	

WARRANTY

EARMOR® M31 MARK IV & M32 MARK IV is warranted to be free of defects in material and workmanship for a period of 1 year from the date of original purchase.
The warranty is nullified in all of the following situations:
1. The product(s) is/are broken down, reconstructed and/or modified by unauthorized parties.
2. The product(s) is/are damaged through improper use.
3. The product(s) is/are damaged by leakage of batteries.
Production date: see the packaging

CONTACT

For the latest information on EARMOR® products and services Please contact a local distributor or email:
info@earmor.com / csl@earmor.com
EARMOR® official website http://www.earmor.com/
shall prevail in case of any product data changes.

GUANGZHOU OPSMEN TECH CO., LTD.

Tel: +86 20 81179170 Fax: +86 20 81179171
Email: info@earmor.com
Address: Room 601, Building A, No.94 Liwan Road, Liwan District, Guangzhou, Guangdong Province, China 510170

CE 2797 EN352 ANSI S3.19-1974 FC RoHS